CONNECTING COMPETENCE. SCHRACK TECHNIK

PRODUCT MANUAL FOR THE MINI INDUSTRY METER MIZ

- INSTALLATION
- DEVICE DESCRIPTION
- OPERATION

Table of contents

Figure index

Table index

Abbreviations

A	Active energy
+A	Positive active energy (customer imports from utility)
Cl.	Accuracy class
DIN	Deutsches Institut für Normung e.V.
	(German Institute for standards)
EN	European standards
EVU	Utility
IEC	International Electromechanical Commission
Imp.	Impulse
Imp./kWh	Impulse per kWh
L	External conductor
LED	Light Emitting Diode
N	Neutral conductor
P	Active power
+P	Active power (customer imports from utility)
PTB	PTB (German certified body)
S0	Interface accord. to DIN 43 864

1 Prologue

This manual describes all designs of the meter. It is therefore possible that meter features are described here which do not apply to the meter(s) used by you.

1.1 Safety tips

The meters are to be used exclusively for measuring electrical energy and must only be operated within the specified technical data (see also nameplate).

When installing or changing the meter, the conductor to which the meter is connected must be de-energised. Only the intended screw terminals may be used for this. Contact to parts under voltage is **extremely dangerous.** Therefore the relevant back-up fuse is to be removed and stored so that other people cannot insert this unnoticed.

The local standards, guidelines, regulations and instructions are to be obeyed.
Only authorized personnel are permitted to install the electricity meters.

1.2 Maintenance- and guarantee tips

The meter is maintenance-free. With damages (e.g. due to transportation, storing) no repairs may be carried out independently.
As soon as the meter is opened, the guarantee claims cease. The same applies in case the defect can be traced back to external influences (e.g. lightning, water, fire, extreme temperatures and weather conditions, improper or negligent use or treatment).

2 Mounting and installation

2.1 Mounting the meter

The meter is designed for mounting on DIN-rails TH 35-7.5 accord. to DIN 60715.

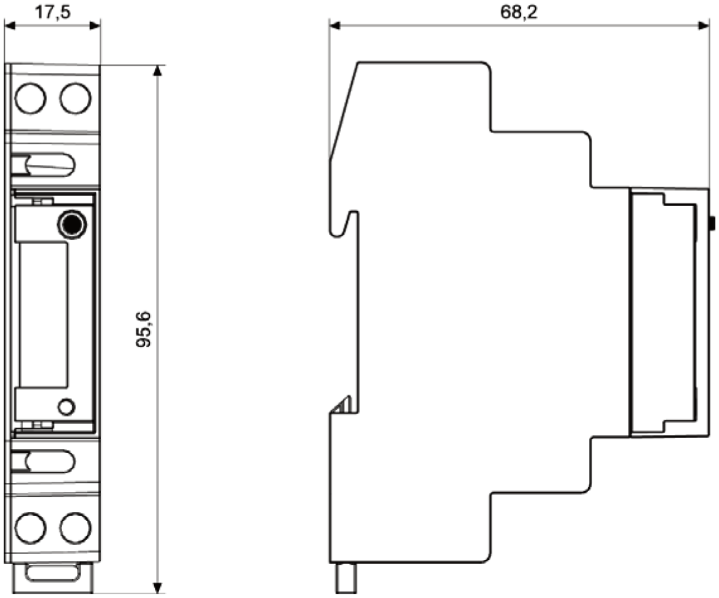

Figure 1: Dimensions

2.2 Installation

When connecting the meter, please pay careful attention to the relevant connection diagram which you can find collateral of the Meter

When installing the meter, after threading the connecting leads, please pay attention that the screws are tightened to the relevant torque (according to EN 60999) to guarantee a safe contact. The torque depends on the type of the connecting leads and the maximum current. To avoid damaging the meter do not exceed the valid, maximum torque for the terminal clamps!

Note: The meter must be secured with an overcurrent protection device of 25 A or 32 A, depending on the meter type.

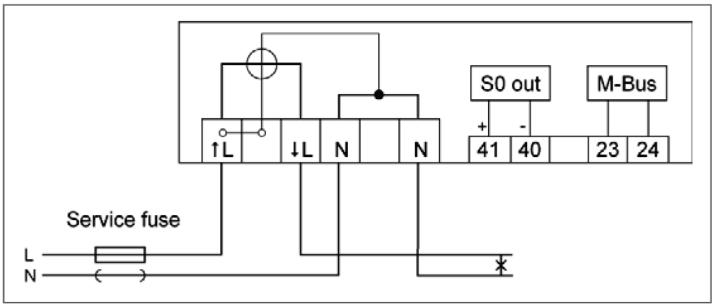

Figure 2: Back-up fuse

	Current terminals	Auxiliary terminals
Terminal dimensions W x H (d) mm	d = 4	d = 2,5
Maximum connection- cross section (mm²)	6	2,5
Maximum torques for terminals (Nm)	1,7	0,5

Table 1: Terminal dimensions, connection-cross sections, torques

3 General description

The MIZ is a digital single tariff meter for measuring positive active energy in 2-wire networks.

These meters are principally used for energy data registration in the industry and building installation, switching stations and the field of utilities.

The compact design of this meter allows „space saving“ mounting (only 1 pitch wide).

The meter has a 6-digit LC-display. The energy consumption values are displayed with 5 integer digits and 1 decimal digit.

They can, however, also be given out via a pulse output (max. 27 V DC, 27 mA) and/or via an electrical interface (M-Bus, according to EN 13757-2, -3). The pulse constant (5 000 Imp/kWh) and the pulse length (50 ms) are fixed.

The meter corresponds to the accuracy class B according to EN 50470-1, -3.

Features of the MIZ

	MGMIZ132	MGMIZ632
Current	0,25-5(32) A	0,25-5(32) A
Instantaneous values	yes	yes
M-Bus-interface	no	yes
Operation button	no	yes
Display lighting	no	yes

Table 2: Features

4 Standards and regulations

DIN 43864	Electricity meters; current interface for pulse transmission between pulse meters and tariff device
EN 13757-2, -3	Communication systems for meters and remote reading of meters (M-BUS) (Compatible extension of EN 1434-3:1997)
EN 50470-1	Electricity metering equipment (a.c.) - Part 1: General requirements, tests and test conditions - Metering equipment (class indexes A, B and C)
EN 50470-3	Electricity metering equipment (a.c.) - Part 3: Particular requirements - Static meters for active energy (class indexes A, B and C)
DIN EN 60529	Degrees of protection provided by enclosures (IP code)
DIN EN 60715	Dimensions of low-voltage switchgear and control gear - standardized mounting on rails for mechanical support of electrical devices in switchgear and control gear installations
DIN EN 61000-3-2, 4-2, -4-3, -4-4, -4-5, -4-6, -4-11, -6-2	Electromagnetic compatibility (EMC)
IEC 62052-11	Electricity metering equipment (AC) - General requirements, tests and test conditions - Part 11: Metering equipment

5 Housing-, operation and display elements

5.1 Front view

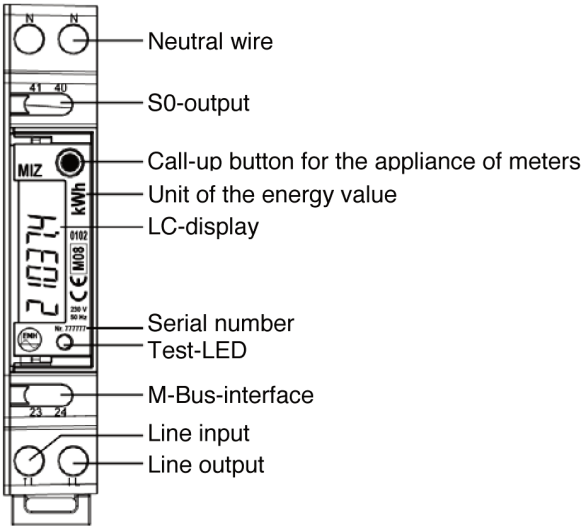

Figure 3: Housing-, operation and display elements: front view

5.2 Side view

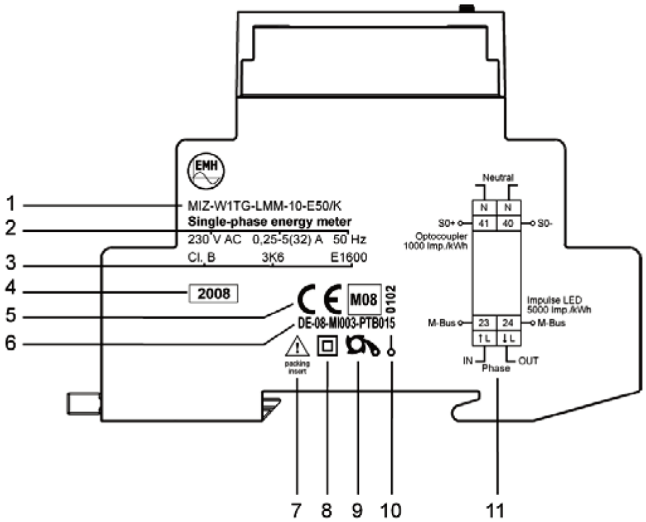

Figure 4: Housing-, operation and display elements: side view

No.	Description
1	Type designation / Type key
2	Voltage, current, frequency
3	Accuracy class, temperature code, contact sequence number
4	Model year
5	CE sign, metrology mark + year of the conformity valuation, designation of the notified body
6	Examination certificate number acc. to EC type-examination certificate
7	Pay attention to package insert
8	Class of protection II
9	Non-reverse ratchet
10	Type of network and load
11	Connection diagram

Table 3: Housing-, operation and display elements: side view

5.3 LC-Display

5.3.1 Description of the display

The meter has a liquid crystal display (LCD) with the following layout:

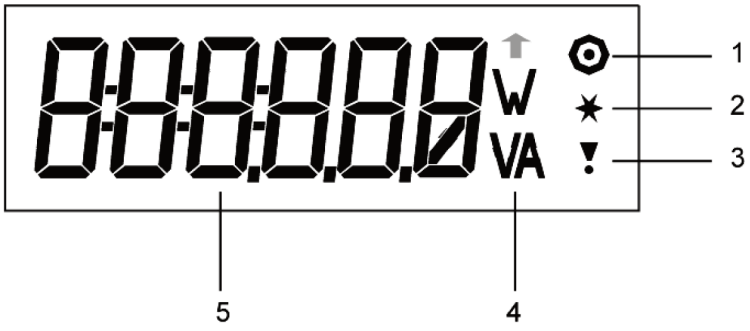

Figure 5: Layout of the display

No.	Description
1	**Circle-Symbol** Flashes when communication with the M-Bus-interface
2	**Star-Symbol** Flashes together with the Exclamation-Symbol in the Test mode
3	**Exclamation-Symbol** Flashes of negative energy direction (Non-reverse ratchet, Installation check)
4	**Display of the units** Unit of the displayed value in the value range **Note:** The energy value is no indication of the unity displayed kWh
5	**Value range** Display the contents of the register

Table 4: Description of the display elements

5.3.2 Displays

	Display	Description	Duration of display	Availability	
				MGMIZ132	MGMIZ632
	888888 W VA	Display test	All display segments flash after start-up for 6 s	✓	✓
	UEr000	Firmware-version	Appears for 5 s	✓	✓
	CS0000	Check sum Code	Appears for 5 s	✓	✓
Scrolling list	FF0000	Error display	Appears for 60 s if an error occurs	✓	✓
	00000.0	Energy value	Appears for 10 s (in case of error only 2 s)	✓	✓
	P0000.0 W	Instantaneous power	Every value appears for 2 s	✓	✓
	U000.00 V	Instantaneous voltage		✓	✓
	I 00.000 A	Instantaneous current		✓	✓
	F00.0 Hz	Network frequency		✓	✓
	PF0.000	Power factor		✓	✓
	A1 000	Primary M-Bus-address			✓
	A2 0000 A2 0000	Secondary M-Bus-address MSW (most significant word) = 4 most significant digits LSW (least significant word) = 4 least significant digits			✓
	bd2400	Baud rate M-Bus			✓
	UEr000	Firmware version		✓	✓
	888888 W VA	Display test		✓	✓
	GoTESt	Test mode start (Call-up list standard mode)			✓
	ESCAPE	Test mode close (Call-up list test mode)			✓

Table 5: Displays

6 Technical description

6.1 Technical data

Voltage	2-wire meter	230 V
Current		0,25-5(25) A or 0,25-5(32) A
Starting current		20 mA
Frequency		50 Hz
Accuracy	active energy	Cl. B accord. to EN 50470-1, -3
Measuring types	active energy	+A
Meter constants	LED	5 000 Imp./kWh
	output	1 000 Imp./kWh
Energy registers		1 tariff register
Data retention time		without voltage in the FLASH / EEPROM, at least 20 years
Display	version	LCD
	number of digits	6
	digitness	5,1
	digit size in the value range	approx. 2,7 x 6,25 (W x H) mm
	display of instantaneous values	scrolling
Operation (option)	operation button	for operation of display
Data interfaces (option)	M-Bus	accord. to DIN EN 13757-2, -3 (300...9600 baud)
Output	number	1
	S0	max. 27 V DC, 27 mA (passive)
	pulse length	50 ms
Energy supply	capacitor power supply	from the measuring voltage
Power consumption	voltage path	< 0,4 W
EMC-characteristics	isolation resistance	isolation: 4 kV AC, 50 Hz, 1 min
	surge voltage	EMC: 4 kV, impulse 1,2/50 µs, 2 Ω,
		ISO: 6 kV, impulse 1,2/50 µs, 500 Ω
	resistance against HF-fields	10 V/m (under load)
Temperature range	specified operating range	-25°C...+55°C
	limit range for operation, storage and transportation	-40°C...+70°C
Relative humidity		95%, non-condensing accord. to IEC 62052-11, EN 50470-1 and IEC 60068-2-30
Housing	dimensions	DIN 43880 (1 pitch wide = 18 mm)
	class of protection	II
	degree of protection	housing, terminals: IP 20
	material	polycarbonate glass-fibre-reinforced
	fire characteristics	accord. to IEC 62052-11
Weight		approx. 67,5 g
Connection-cross section	current- / neutral conductor	max. 6 mm^2
	auxiliary terminals	max. 2,5 mm^2
Further features	measuring of instantaneous values	power, voltage, current, frequency and power factor

Table 6: Technical data

6.2 Function circuit diagrams

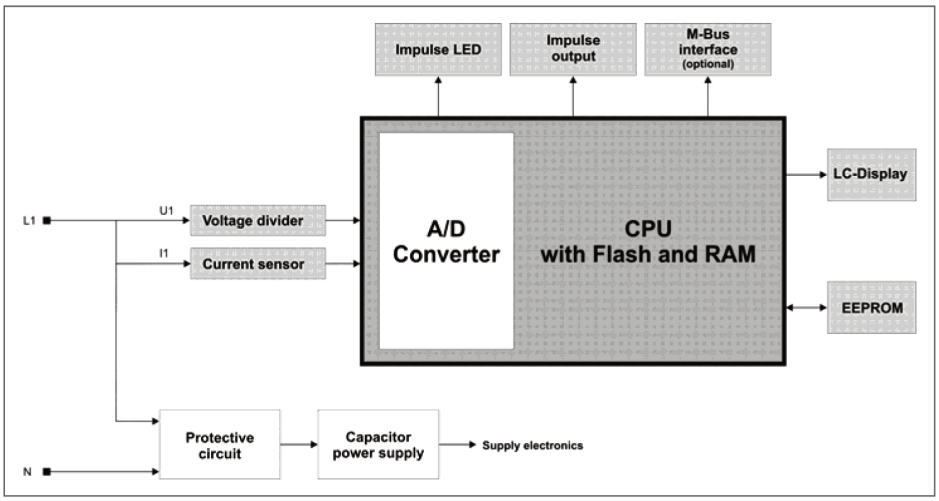

Figure 6: Function circuit diagrams

6.3 Power supply

The MIZ is supplied by a capacitor power supply and is short circuit-proof. Available voltage versions: 230 V, 2-wire

6.4 Output

The MIZ has a potential free S0-output (acc. to DIN 43864) which is designed as maker contact.

Specification	
S0	max. 27 V DC, 27 mA (passive)

Table 7: Specifications of the outputs

The impulse length is 50 ms with an pulse value of 1 000 Imp./kWh.

6.5 Test-LED

The test-LED is used for output of energy proportional active energy pulses and for the display of start-up and no load operation.
The LED constant is 5 000 Imp./kWh in the standard mode and in the test mode 50 000 Imp./kWh, the pulse length is 50 ms.
If the meter below the start-up threshold the LED lits continuously. Above its start-up threshold, the meter displays energy proportional pulses.

6.6 M-Bus-interface (only with „Premium“-version)

The M-Bus interface is designed accord. to DIN EN 13757-2, -3. Via M-Bus the following parameters can be transmitted:

- Manufacturer identification
- Medium 2 (electricity)
- Primary- and secondary addresses M-Bus
- Energy value
- Instantaneous value (P, U, I), Frequency, Power factor, Operation time
- Error status
- Baud rate

7 Operation of the meter (only with „Premium“-version)

The display in the „Premium“-version of the MIZ can be additionally controlled via mechanical button (Call-up button).

7.1 Display control

When the call-up button will be pressed, the meter will be switched automatically to the display of the energy value or if there is an error, the meter will be switched to the error display. The lighting of display will be activated. After the expiration of 15 seconds without operation, the display backlight will be switched to half intensity.

The following applies for operation of the meter via the call-up button:

- Short keypress (t < 2 s): switches over to the next value of the list
- Long keypress (2 s < t < 5 s): activation of a menu-point
- Longest keypress (t > 5 s): back to the standard display

During normal operation the meter is in the standard mode. If the meter is in a different condition, 5 minutes after the last operation of the button the display will automatically returns to the standard display

8 Operating conditions

The data are saved every 24 hours. The operating hours counter registers expired hours of continuous operation.
In case of voltage return and every hour during operation the meter carries out checks of:

- Check sum about the firmware
- Check sum about the parameter data
- Check sum about the settable data (M-Bus-data, only with the “Premium”-version)

If an error appears during this check, an error code will be shown in the display.

Error code	Explanation	MGMIZ132	MGMIZ632
F:F:000**1**	Checksum of the firmware is incorrect	✔	✔
F:F:000**2**	Checksum of the parameterisation data is incorrect	✔	✔
F:F:000**3**	Checksum of the parameterisation data and of the firmware is incorrect	✔	✔
F:F:000**4**	Checksum of the changeable data is incorrect		✔
F:F:000**5**	Checksum of the changeable data and of the firmware is incorrect		✔
F:F:000**6**	Checksum of the changeable data and of the parameterisation data is incorrect		✔
F:F:000**7**	Checksum of the changeable data, of the parameterisation data and of the firmware is incorrect		✔

Table 8: Error code description

If an error is shown, the meter is not allowed to be used for billing purposes.
The reset of the error code only can be made at the factory.

8.1 Standard operation mode

During normal operation the meter is in the standard operation mode.

8.2 Primary M-Bus-address (only with „Premium“-version)

If „A1:000“ appears in the display, the menu for setting the M-Bus-address can be activated via long keypress (2 s < t < 5 s). “A1” starts to flash in the display.

There are two possibilities to set the primary address:

a) Short press on the Call-up button (t < 2 s) = value increases by 1 or
b) Long press on the Call-up button (t > 2 s) = value increases by 10 at an interval of 0,5 s

If the maximum value of 250 is reached, it is reset to 0.

Note: After entering the primary address, the call-up button may not be used for the next 6 s.

If the entered primary address flashes, you can continue as follows:

a) Short keypress (t < 2 s) = enter of a new value, “A1” flashes in the display or
b) Long keypress (2 s < t > 5 s) = value acceptance and return to the standard display or
c) Longer keypress (t > 5 s) = reject of the entered value and return to the standard display

When the call-up button will not be pressed after 5 minutes of input of the primary address, it will be rejected and the display will be switched automatically back to the default display.

8.3 Baud rate M-Bus (only with „Premium“-version)

If „bd:2400“ appears in the display, the menu for setting the baud rate can be activated via long keypress (2 s < t < 5 s). “bd” starts to flash in the display.
Via short keypress the next value of the list (300 – 2400 – 9600) will be shown.
The acceptance of the baud rate takes place via long keypress (2 s < t > 5 s).
If the button will be pressed longer (t > 5 s), the selected baud rate will be rejected. In both cases the reset to the standard display will be carried out.
When the call-up button will not be pressed after 5 minutes of input of the baud rate, it will be rejected and the display switched automatically back to the default display.

8.4 Test mode (for certification only and only with „Premium“-version)

The test mode is only for testing and inspecting purposes and is only available with the “Premium”-version. If the meter is in the test mode, the star symbol and the exclamation symbol flash.

The test mode will be activated as follows:

1. automatically after successful adjustment or
2. from the standard operation mode via call-up button in the menu „GotESt“.

In the test mode the impulse constant is 10 times higher. The impulse length is 3 ms.

The test mode will be closed as follows:

1. via the Call-up button in the menu item „ESCAPE“ in the standard operation mode or
2. automatically after 10 s undervoltage of all phases (70% U_{Nenn}) or
3. automatically after 72 hours continuous operation, if the test mode has been activated after adjustment
4. automatically after 12 hours continuous operation, if the test mode has been activated via standard operation mode