CONNECTING COMPETENCE. SCHRACK TECHNIK

PRODUCT MANUAL FOR THE COMPACT INDUSTRY METER KIZ

- INSTALLATION
- DEVICE DESCRIPTION
- OPERATION

Table of contents

Figure index

Table index

Abbreviations

A	Active energy
+A	Positive active energy (customer imports from utility)
-A	Negative active energy (customer exports to utility)
Cl.	Accuracy class
DIN	Deutsches Institut für Normung e.V. (German Institute for standards)
EN	European standards
EVU	Utility
IEC	International Electromechanical Commission
Imp.	Impulse
Imp./kWh	Impulse per kWh
L1, L2, L3	External conductor
LED	Light Emitting Diode
N	Neutral conductor
P	Active power
PTB	PTB (German certified body)
S0	Interface accord. to DIN 43 864

1 Prologue

This manual describes all designs of the meter. Please note that the meters can be designed differently regarding, for example, configuration, interfaces in-/outputs etc. It is therefore possible that meter features are described here which do not apply to the meter(s) used by you.

1.1 Safety tips

The meters are to be used exclusively for measuring electrical energy and must only be operated within the specified technical data (see also nameplate).

When installing or changing the meter, the conductor to which the meter is connected must be de-energised. Only the intended screw terminals may be used for this. Contact to parts under voltage is **extremely dangerous.** Therefore the relevant back-up fuse is to be removed and stored so that other people cannot insert this unnoticed.

With incorrect meter installation the S0-inputs can lead to line voltage.
Attention: Danger!

The local standards, guidelines, regulations and instructions are to be obeyed.
Only authorized personnel are permitted to install the electricity meters.

1.2 Maintenance and guarantee tips

The meter is maintenance-free. With damages (e.g. due to transportation, storing) no repairs may be carried out independently.
As soon as the meter is opened, the guarantee claims cease. The same applies in case the defect can be traced back to external influences (e.g. lightning, water, fire, extreme temperatures and weather conditions, improper or negligent use or treatment).

2 Mounting and installation

2.1 Mounting the meter

The meter is designed for mounting on DIN-rails TH 35-7.5 accord. to DIN 60715.

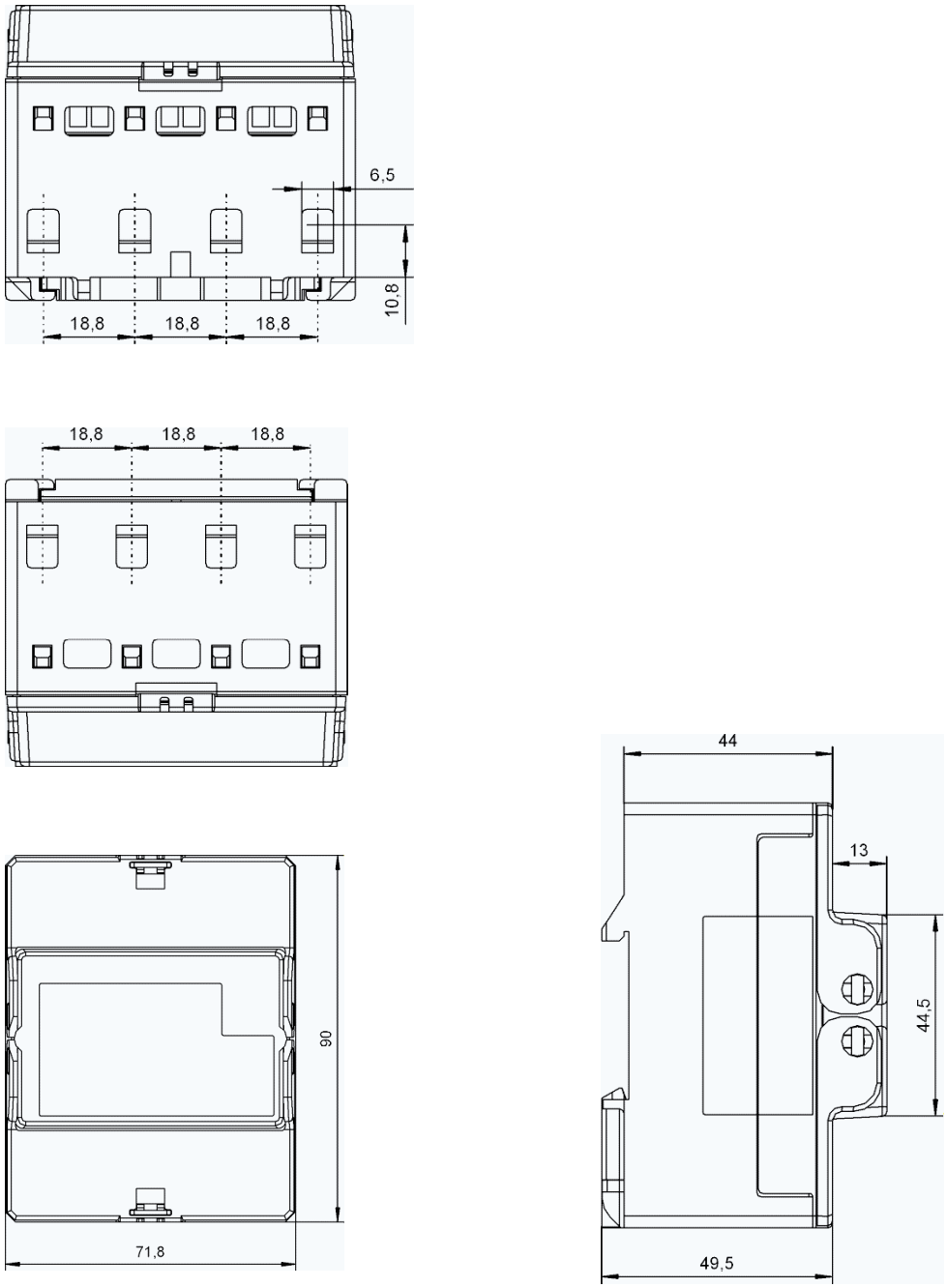

Figure 1: Dimensions

2.2 Installation

When installing the meter, please pay careful attention to the connection diagram which can be found on the inside of the terminal cover. On page 8 you can find examples of connection diagrams.

The meter must be secured with an overcurrent protection device of 63 A. The control input is to be protected with a back-up fuse of 0,5 A.

In order to protect the meter from unauthorized access, the meter can be equipped with a seal at the sealing eye (see page 11).

The current and voltage supply inputs can be found on the top of the meter.

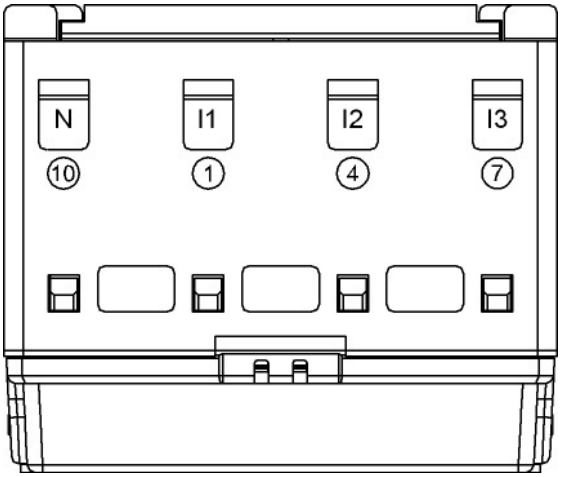

The current outputs, the optional electrical interface, the control input and the impulse output can be found on the bottom of the meter.

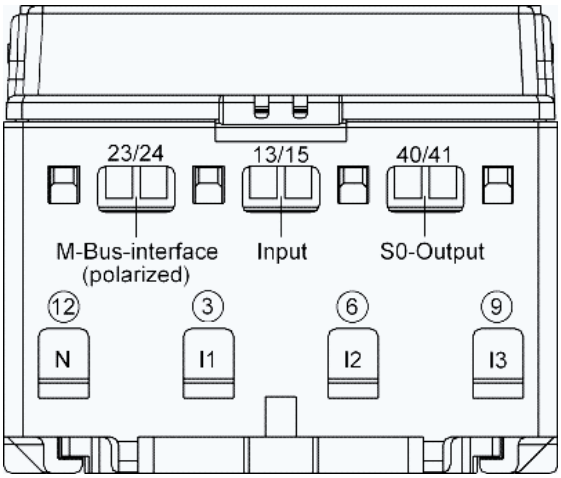

	Current terminals / N- terminals	Voltage / Auxiliary terminals
Terminal dimensions W x H (d) mm	6,4 x 6,5	d= 2,5
Maximum connection-cross section (mm^2)	16	2,5
Maximum torques for terminals (Nm)	3,0	0,8

Table 1: Terminal dimensions, connection-cross sections, torques

Note:
Please ensure when installing the meter that, after threading the connecting leads, the screws are tightened to the correct torque according to EN 60999 in order to guarantee a safe contact. The torque depends on the type of the connecting leads and the maximum current.

In order to avoid damage to the meter the valid, maximum torque for the terminal clamps may not be exceeded.

2.2.1 Connection examples

In the following you can find examples of some connection diagrams. When connecting a meter pay attention to the connection diagram which can be found inside the terminal cover or in the delivery documents.
Attention: The neutral terminals 10 and 12 are arranged on the left!

2-wire version, direct connection

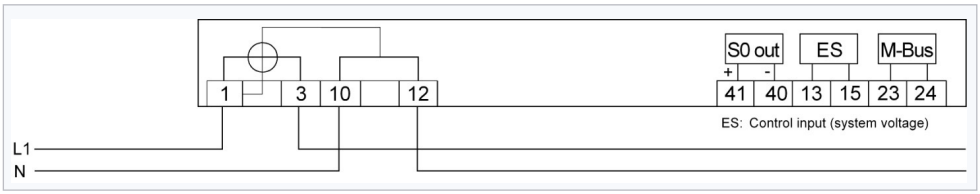

4-wire version, direct connection

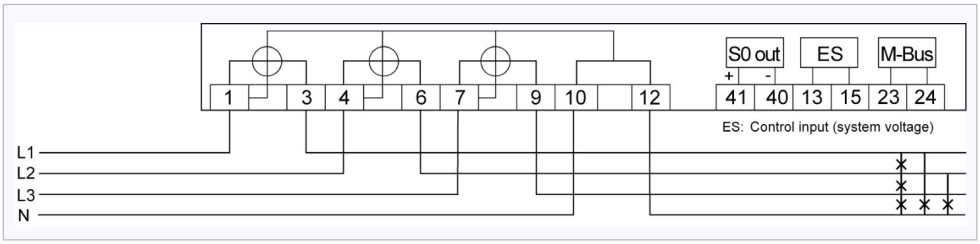

3 General description

In the following all design variants of the meter are described.
It is therefore possible that meter features are described which do not apply to the meter used by you.

The meter is a digital 1- or 2- tariff meter for measuring positive active energy in 2- and 4-wire networks.
Tariff switching takes place via an external control input. The meters are principally used for energy data registration in the industry and building installation, switching stations and the field of energy supply. The compact design of this meter allows „space saving“ mounting (only 4 pitch wide).

The meter has a 7-digit LC-display. The energy consumption values are displayed with 6 integer digits and 1 decimal digit.

They can, however, also be given out via a pulse output (max. 27 V DC, 27 mA) and/or via an electrical interface (M-Bus, according to EN 13757-2, -3). The pulse constant (100 Imp/kWh) and the pulse length (100 ms) are fixed.

The meter corresponds to the accuracy class B according to EN 50470-1, -3.

4 Standards and regulations

DIN EN 13757-2, -3	Communication systems for meters and remote reading of meters
EN 50470-1	Electricity metering equipment (a.c.) - Part 1: General requirements, tests and test conditions - Metering equipment (class indexes A, B and C)
EN 50470-3	Electricity metering equipment (a.c.) - Part 3: Particular requirements - Static meters for active energy (class indexes A, B and C)
DIN EN 60529	Degrees of protection provided by enclosures (IP code)
DIN EN 60715	Dimensions of low-voltage switchgear and control gear - standardized mounting on rails for mechanical support of electrical devices in switchgear and control gear installations
DIN EN 61000-3-2, 4-2, -4-3, -4-4, -4-5, -4-6, -4-11, -6-2	Electromagnetic compatibility (EMC)
IEC 60068-2-30	Environmental testing - Part 2-30: Tests - Test Db: Damp heat, cyclic (12 h + 12 h cycle)
IEC 62052-11	Electricity metering equipment (AC) - General requirements, tests and test conditions - Part 11: Metering equipment
IEC 62053-21	Electricity metering equipment (a.c.) - Particular Requirements - Part 21: Static meters for active energy (classes 1 and 2)
TIA/EIA-485	Electrical characteristics of generators and receivers for use in balanced digital multipoint systems

5 Housing-, operation and display elements

5.1 Overview

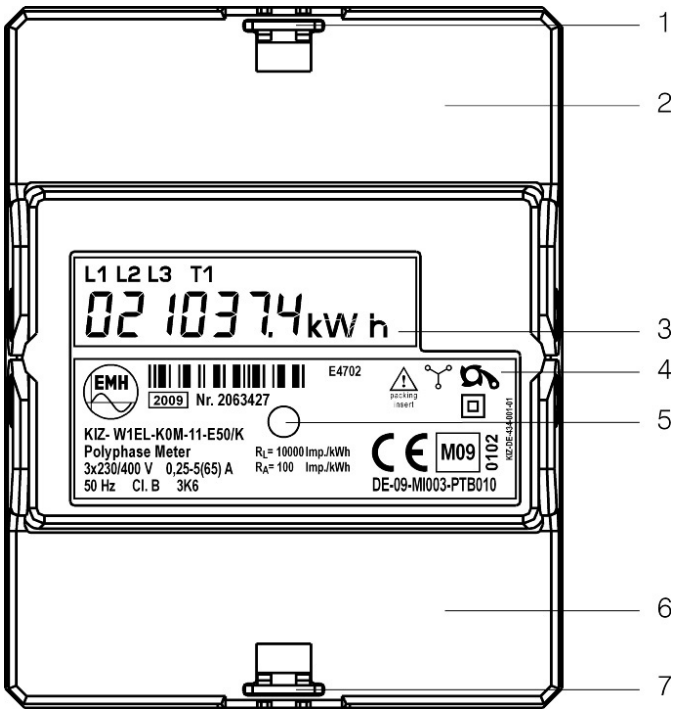

Figure 2: Housing-, operation and display elements

No.	Description
1	Sealing eye
2	Terminal cover with connection diagram
3	LC-Display
4	Nameplate
5	Test-LED
6	Terminal cover with description of the auxiliary terminals
7	Sealing eye

Table 2: Housing- and display elements

5.2 LC-Display

The meter has a liquid crystal display (LCD) with the following layout.

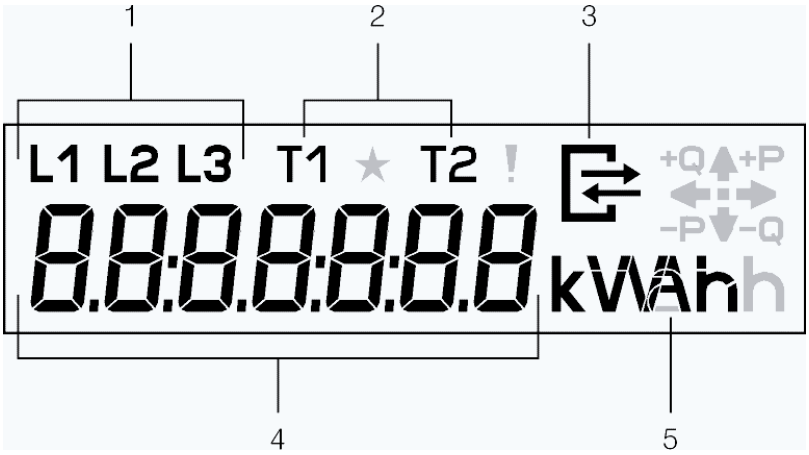

Figure 3: Layout of the display

No.	Description	
1	**Phase display** L1, L2, L3 are continually lit up: L1, L2, L3 flash: L1, L2, L3 off:	 Phase voltages are applied. Phase sequence of the voltage is wrong Failure of the phase
2	**Display of active tariffs** T1 lights up: T1 lights up and T2 flashes: T2 lights up: T2 lights up and T1 flashes:	 Tariff 1 is active, Display tariff register 1 Tariff 1 is active, Display tariff register 2 Tariff 2 is active, Display tariff register 2 Tariff 2 is active, Display tariff register 1
3	**Communication symbol** lights up:	 When communication with the electrical interface
4	**Value range**	Display the contents of the register
5	**Units**	Unit of the displayed value in the value range

Table 3: Description of the display elements

5.3 Display elements

Note: Non-existing functions (e.g. M-Bus) do not appear in the display.

	Display	Description	Duration of display
	L1 L2 L3 T1 ★ T2 ! 8.8.8.8.8.8.8 kWAh	Display test	All display segments flash after start-up for approx. 4 s
	L1 L2 L3 T1 UEr. 100	Firmware- version	Appears for 5 s
	L1 L2 L3 T1 CS:00000	Check sum Code	Appears for 5 s
Scrolling list	L1 L2 L3 T1 FF:00000	Error display	Appears for 60 s if an error occurs
Scrolling list	L1 L2 L3 T1 000000.0 kW h	Energy value active tariff	Appears for 10 s (in case of error only 4 s)
Scrolling list	L1 L2 L3 T1 T2 000000.0 kW h	Energy value inactive tariff	Appears for 5 s
Scrolling list	L1 L2 L3 T1 P : 0.08 W	Sum of power P	Every value appears for 2 s
Scrolling list	L1 L2 L3 T1 P1: 0.03 W	Power P phase 1	
Scrolling list	L1 L2 L3 T1 P2: 0.04 W	Power P phase 2	
Scrolling list	L1 L2 L3 T1 P3: 0.01 W	Power P phase 3	
Scrolling list	L1 L2 L3 T1 U1: 229 V	Voltage U phase 1	
Scrolling list	L1 L2 L3 T1 U2: 230 V	Voltage U phase 2	
Scrolling list	L1 L2 L3 T1 U3: 228 V	Voltage U phase 3	
Scrolling list	L1 L2 L3 T1 I1: 0.01 A	Current I phase 1	
Scrolling list	L1 L2 L3 T1 I2: 0.01 A	Current I phase 2	
Scrolling list	L1 L2 L3 T1 I3: 0.00 A	Current I phase 3	
Scrolling list	L1 L2 L3 T1 A1: 123	Primary M-Bus-address	
Scrolling list	L1 L2 L3 T1 A2: 1234 L1 L2 L3 T1 A2:5678	Secondary M-Bus-address MSW (most significant word) = 4 most significant digits LSW (least significant word) = 4 least significant digits	
Scrolling list	L1 L2 L3 T1 ★ T2 ! 8.8.8.8.8.8.8 kWAh	Display test	

Table 4: Display elements

6 Technical description

6.1 Technical data

Voltage	4-wire meter	3x230/400 V
	2-wire Meter	230 V
Corrente		0,25 – 5(65) A
		0,5 – 10(65) A
Starting current		20 mA
Frequency		50 Hz
Accuracy	active energy	Cl. B acc. to EN 50470-1, -3
Measuring types	active energy	+A (with non-reverse ratchet)
Meter constants	LED	10 000 Imp./kWh
	output	1000 Imp./kWh
Energy registers	number	max. 2 tariff registers (T1 / T2)
Control input for tariff switching (option)	number	max. 1
	system voltage	230 V AC
Data rentention time		without voltage in FLASH / EEPROM, at least 20 years
Display	version	LCD
	number of digits	7
	digitness	6,1
	digit size in the value range	approx. 5,8 x 3,5 (H x W) mm
Data interface (option)	M-Bus	acc. to DIN EN 13757-2, -3 (300...9600 Baud)
Output (option)	number	1
	S0	max. 27 V DC, 27 mA (passive)
	pulse length	100 ms
Energy supply	switched-mode power supply	3-phase from the measuring voltage
Power consumption per phase	voltage path	< 0,55 VA/ < 0,4 W
	current path	< 0,01 VA
EMC-characteristics	isolation resistance	isolation: 4 kV AC, 50 Hz, 1 min
	surge voltage	EMC: 4 kV, impulse 1,2/50 µs, 2 Ω
		ISO: 6 kV, impulse 1,2/50 µs, 500 Ω
	resistance against HF-fields	10 V/m (under load)
Temperature range	specified operating range	-25°C…+55°C
	limit range for operation, storage and transportation	-40°C...+70°C
Relative humidity		95% non-condensing acc. to IEC 62052-11, EN 50470-1 and IEC 60068-2-30
Housing	dimensions	4 TE = 72 x 90 x 61 mm (W x H x D)
	class of protection	II
	degree of protection housing	IP 20
	degree of protection terminals	IP 20
	material	polycarbonate glass-fibre-reinforced
	fire characteristics	acc. to IEC 62052-11
Weight		approx. 350 g
Connection-cross section	current- / neutral terminals	max. 16 mm²
	voltage- / auxiliary terminals	max. 2,5 mm²
Further features	measuring of instantaneous values	power, voltage, current

Table 5: Technical data

6.2 Function circuit diagrams

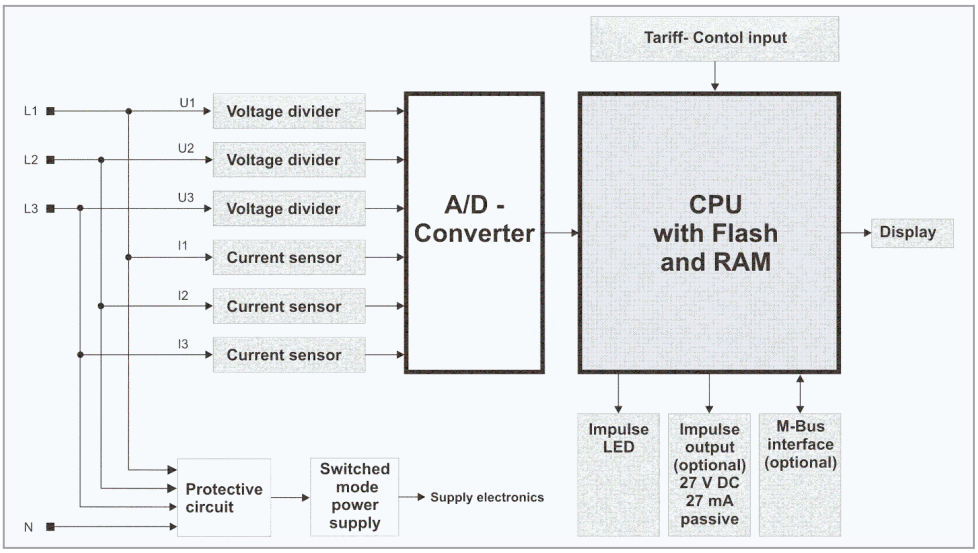

Figure 4: Function circuit diagram

6.3 Inputs

The meter has for the two tariff version a control input (system voltage) for tariff switching.

Specifications	
System voltage	230 V AC (standard)

Table 6: Specification of the input

6.4 Outputs

The meter has a potential free S0-output (accord. to DIN 43 864).

Specifications	
S0	max. 27 V DC, 27 mA (passive)

Table 7: Specification of the output

The output constant (R_A) depends on the version.

6.4.1 Test-LED

The LED constant (R_L) depends on the version.

6.5 Interfaces

6.5.1 M-Bus-interface

The M-Bus interface is designed accord. to DIN EN 13757-2, -3. Via M-Bus the following parameters can be transmitted:

- Manufacturer identification
- Medium
- Primary- and secondary addresses M-Bus
- Energy values
- Instantaneous value P (per phase and sum), U and I (per phase)
- Error status

This data is emitted as a standard answer and can be displayed by customary tools such as “Lorus”.
The primary M-Bus-address, the secondary M-Bus-address and the Baud rate can be changed via the standard M-Bus commands.

7 Articles

Digital 4-wire-kWh-meter, type KIZ, direct 65A, 2 tariffs	MGKIZ065
Digital 4-wire-kWh-meter, type KIZ, direct 65A, 2 tariffs, with M-Bus	MGKIZ365
Digital 2-wire-kWh-meter, type KIZ, direct 65A, 2tariffs	MGKIZ165
Digital 2-wire-kWh-meter, type KIZ, direct 65A, 2tariffs, with M-Bus	MGKIZ665

EMH Elektrizitätszähler GmbH & Co KG is certified accord. to DIN ISO 9001:2000
and continually endeavors to improve their products.

The contents of this manual and the technical specifications can be extended,
altered or removed without prior notice.

The description of the product specifications in this manual does not represent
part of a contract.

If you have any questions or inspirations you can contact us:

SCHRACK Technik GmbH

Seybelgasse 13
AT-1235 Wien

www.schrack.com