REACTIVE POWER REGULATOR

- COMPENSATION OF REACTIVE POWER WITH FULL AUTOMATIC RECOGNITION AND MONITORING OF CAPACITOR SIZE
- INTELLIGENT REGULATION ALGORITHM GUARANTEES THE BEST CHOICE OF CAPACITORS AND A SHORT TIME TO REACH TARGET
- FOR COMMISSIONING OF REGULATION FUNCTION, IN MOST CASES THERE ARE NO SETTINGS NECESSARY
- LESS INSTALLATION MISTAKES DUE TO AUTOMATIC PHASE CORRECTION

SCHRACK-INFO

Reactive power compensation panels are used to reduce load in the electrical grid and to save costs. This is the reason, that there are special requirements for the control units of these compensation panels, the reactive power regulator. The most important task of the reactive power regulator is to control the reactive power. This is reducing the costs for electrical energy. Cables, transformers, switch components and power distribution are unloaded by reduction of reactive power. Another task of the reactive power regulator is to monitor the compensation panel and to issue alarms.

FUNCTION

The intelligent regulation algorithm of SCHRACK switches the steps optimized and by doing this it guarantees short compensation times combined with the smallest amount of operations. The operating cycles are shared equally to all steps. All relevant parameters for the regulation are set ex works in the way that in nearly all cases for BLR-CX no further adjustments are necessary to start the regulation. An optimization of the control mode of the compensation panel to the local conditions is still possible. Parameters can easily be changed, also during operation.
These settings can be done in two separate user menues. The "Start" menue contains only the settings, which can be necessary for commissioning, like nominal voltage, CT and VT ratio and the automatic correction of current and voltage connection. These settings and furthers settings of the "Expert" menue are:

Measuring: nominal voltage, CT ratio, VT ratio, tolerance of voltage, connection Ph-PhIPh-N, phase-correction, autom. correction of connection, synchronisation, reset operating hours, reset average PF, reset max. temperature

Regulation: sensitivity, target-cosphi 1 and 2, switch interval, delay step exchange, stepexchange, autom. capacitorsize detection, blocking of defective steps, ReguLprogr.: Best-Fit, LIFO, combi, progressiv, Offset reactive power, asymmetric switch interval

Steps: discharging time, step size in kvar, step type (e.g. fix-steps)

Alarming: regulation alarm, defective step alarm, power loss of capacitors, THD U Alarm, overtemperature, limit switching operations, limit operating hours of panel, limit tempIltemp2 I=0 freeze regulation, etc.

For starting regulation, only the correct setting of nominal voltage is necessary. Otherwise the regulation is blocked to protect the capacitors. If CT ratio is not set, then all the measurement readings which are dependent on this setting are blanked. A wrong connection can be corrected by starting the automatic phase correction. For maintenance work, each individual step can be switched manually.

MEASURING

BLR-CX is calculating by the measurement of current and voltage the power conditions in the electrical network. Generally, it's not important, in which phases voltage and current are connected, because the connection is corrected by BLR-CX after starting the automatical phase correction. The min. sensing current is 15mA, which ensures a reliable and exact regulation. For the current measuring 1 A CTs can be used as well as 5A CTs. For this, there is no manual changing of any settings necessary. The wide range SMPS allows to realize voltage measuring in a range between 90V and 550V.

By using the temperature sensor, BLR-CX can measure the internal temperature of the compensation panel and can switch by using one of the exit relays a fan. The switch-off of the capacitor steps due to overtemperature can be triggered by reaching the second overtemperature level or can be triggered by N/O contacts of external thermostates, which are connected in parallel to the temperature sensor.

All of these requirements are solved by SCHRACK reactive power regulators with their patented regulation principle. By continuously measuring the capacitor power, the steps are always used with their exact capacitor ratings. The regulation program is only defined by the choice of the capacitor sizes. There are no limitations and no settings for step sequence are necessary at BLR-CX. If BLR-CX cannot recognize anymore the function of a step e.g. caused by damaged capacitors, contactors or blown fuses, then it shows alarm. The integrated alarm relay with sign-of-life contact can forward this fault information also to a control room.

MONITORING

The monitoring features of BLR-CX guarantuee a reliable operation and a long life of the compensation panel:

- Low voltage switch-off against chattering of contactors
- Over voltage switch-off for protection of the capacitors
- Overtemperature switch-off
- Monitoring of THD U
- Recognition of defective capacitors
- Alarming, when target of regulation cannot be reached
- Signalling of the need for maintenace
- Fan control

Failures and status messages are shown on the LCD. Failures can also be forwarded by the voltage free alarm-contact (sign-of-life signal). For switching the fan, one of the step-exits has to be used.

DISPLAY

BLR-CX is equipped with LCD with backlite. It shows information about the panel and about the mains parameters. It's also necessary for setting the paramters of BLR-CX:

Mains paramters: voltage, current, kW, kvar, kVA, kvar to target, THD U, 3rd to 15th harmonic of voltage, cos phi, powerfactor, frequency, temperature

Panel informations: power-on hours of panel, operating cycles per step, max. temperature of panel, average power factor, rating per step in kvar, percentage of the rating per step compared with the nominal rating.

Cos phi and status of the outputs are shown permanently.

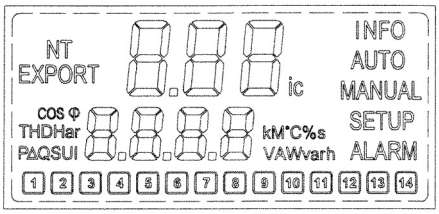

High-contrast LCD with backlite and temperature range from -20°C to 70°C

FEATURES

Standard features:

Auxiliary voltage is taken from voltage measuring path

Measuring-auxiliary voltage:	90-550V, 45-65Hz
Current path:	1 x 20mA - 6A
Alarm relay:	1 x no contact (sign-of-life)
Number of control step outputs:	6,8,12,14

Terminal for connecting a temperature-sensor

TTL-interface

Accessories:

Temperature-sensor

DIMENSIONS

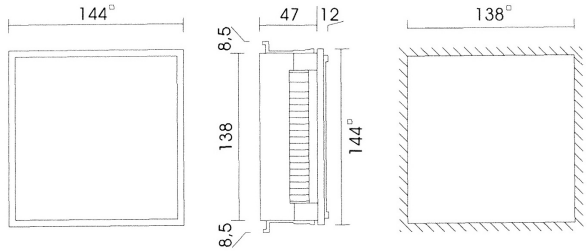

CONNECTION DIAGRAM

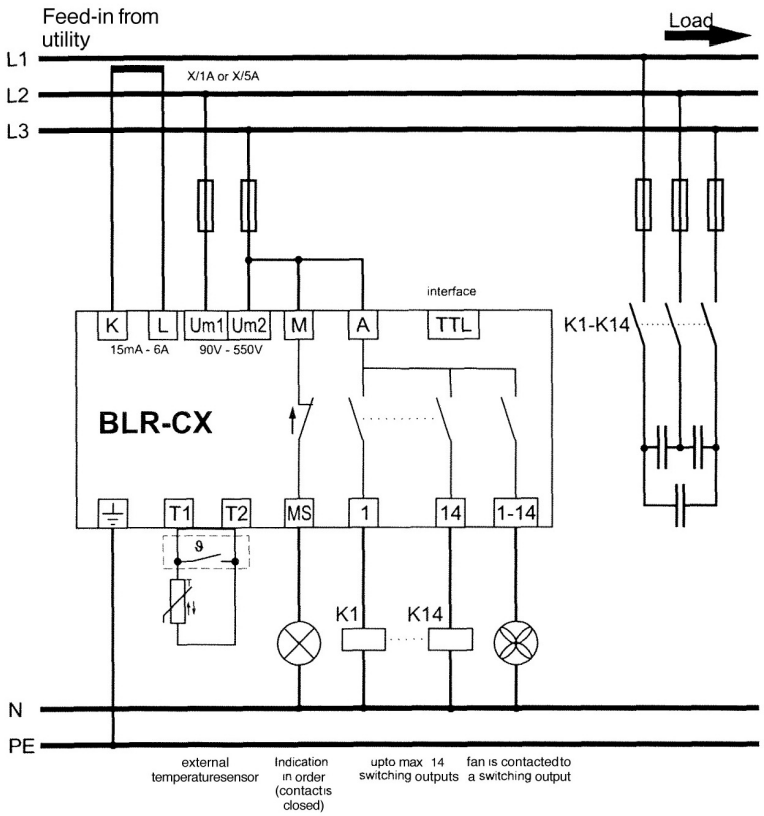

TECHNICAL DATA

Type of Device:	Reactive power regulator
Control Variable:	Electrical displacement reactive power
Priciple of Regulation:	Stepped regulation with the following modes: • Best-Fit: starting with the biggest steps • LIFO: last in-first out • Combifilter: Best-Fit, with more connected power of odd exits • Progressiv:all required outputs are switched in quasi one operation
Special Features:	• Automatic detection and correction of the phase of current and voltage connection • Automatic detection of the used outputs • Automatic detection and adaption of the capacitor ratings • Over- and undervoltage monitoring • Monitoring of THD U • Overtemperature switch-off
Measuring Display:	V, A, kVA, kW, kvar, cosphi, PF, Akvar, THD U, 3rd to 15th harmonic of voltage
information Display:	Switch cycles per step, capacitor rating, status of the outputs, operating hours of the panel, max.temperature, average PF
Measuring- and Auxiliary Voltage:	90- 550V AC, single phase, 45-65HZ, 5VA, max. fuse 6A, VT ratio from 1,0 to 350,0
Current Measuring:	15mA -6A, single phase, burden 20mOhm, CT ratio from 1 to 4000
Control outpus:	Up to 14 relays, N/O, voltfree with common point, max. fuse 6A, breaking capacity: 250V AC / 5A
Temperature measurement:	By NTC
Sign-Of-Life contact:	Relay, voltage free, N/O, max. fuse 4A, breaking capacity: 250V AC / 5A
Fan Control:	By using a control output
Interface:	TTL, rearside
Ambient Temperature:	Operation: -20°C-70°C, storage: -20°C-80°C
Humidity:	0% - 95%, without moisture condensation
Overvoltage class:	11, pollution degree 3 (DIN VDE 0110, Teil 1 / IEC60664-1)
Standards:	DIN VDE 0110 Teil 1 (IEC 60664-1 :1992) VDE 0411 Teil 1 (DIN EN 61010-1 / IEC 61010-1 :2001) VDE 0843 Teil20 (DIN EN 61 326 / IEC 61 326: 1997 + A1 : 1998 +A2: 2000)
Conformity and Listing:	CE, UL, cUL
Terminals:	Plugable terminal blocks, screw type, max. 4mm²
Casing:	Front: instrument casing plastic (UL94-VO), Rear: metal
Protection Class:	Front: IP50, (IP54 by using a gasket),
Rear:	IP20
Weight:	approx. 0,6kg
Dimensions:	144x144x58mm hxwxd, cutout 138 (+0,5) x 138 (+0,5)mm

TYPE			ORDER NO.
BLR-CX 06R	Reactive power regulator	6 steps	FRBLRCX06R
BLR-CX 08R	Reactive power regulator	8 steps	FRBLRCX08R
BLR-CX 12R	Reactive power regulator	12 steps	FRBLRCX12R
BLR-CX 14R	Reactive power regulator	14 steps	FRBLRCX14R
BLR-CX NTC	Temperature sensor		FRBLRCXNTC